Milesight

TrafficX

TrafficX Camera
& TrafficX Enforcement Camera

KEY FEATURES

- **Dual-camera Integrated Evidence Collection**
  (By utilizing **Vehicle Close-up ANPR**, in combination with **Surveillance Overview**, the capture and analysis of vehicle targets and behavior enable the acquisition of reliable synchronized time and scene evidence.)
- **250km/h High Recognizable Speed** (Exceling at capturing detailed fast-paced dynamic scenes, covering 3 lanes and distance up to 50m.)
- **24/7 High Accuracy** (Achieving 99% capture rate and 98% license plate recognition rate even in low-light environments.)
- **Edge AI-based ANPR** (Incorporating advanced image processing technology capable of accurately recognizing both reflective and non-reflective license plates, it swiftly and precisely identifies license plate numbers and colors, as well as captures vehicles without license plates. Additionally, it collects relevant attributes such as vehicle color, type, and brand information.)
- **Professional violation recognition, reliable enforcement assistant.**
- **Easy Installation** (Embedded 4G module for easy network connection and flexible angle adjustment design.)
- **Compatibility** (Support CGI/APIs and TCP/HTTP/MQTT protocols for easy integration.)

ISP 250km/h IP67 4G GST ONVIF

Dual-Sensor Evidence Collection

The dual-sensor of TrafficX camera focusing on different aspects, provides simultaneous evidence with a unified timeline. ANPR sensor focuses on vehicle close-ups and license plate recognition, while the Evidence sensor captures clear full overviews of the surrounding environment. It enables comprehensive and high-precision data and information retrieval.

Ace-Level Vehicle Acquisition Capability

Thanks to the high-performance chip and the revolutionary Frame Parity Flashing and Global Shutter technology, this camera provides a comprehensive and groundbreaking level of enhancement. It achieves an impressive vehicle capture rate of 99% and a vehicle recognition rate of 98%. It is capable of capturing vehicles traveling at speeds up to 250 km/h. With a coverage distance of 50 meters, it showcases extraordinary capabilities in capturing vehicle-related information.

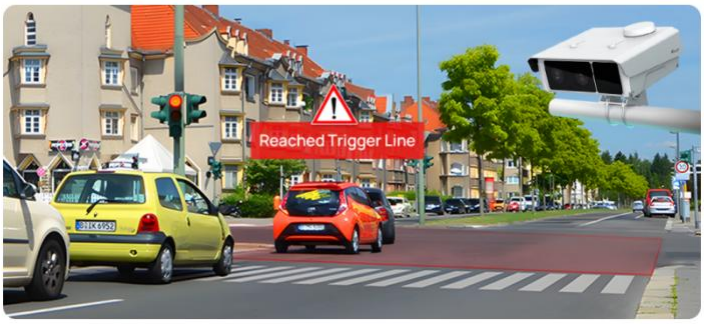

Traffic Violation Detection

AI-based TrafficX series cameras accurately detect and alert violation events such as Red Light Violation **(TS5511-GH)**, Reverse Driving Detection, No-plate Vehicle Detection, Black/White List Detection and Vehicle Event Detection based on recognized vehicle features.

Easy Deployment and Management

Easy camera deployment, professional-grade IP67 protection and reliable construction. Optional 4G LTE allows wireless transmission via SIM card, eliminating the need for complex network cable connections. Built-in GPS facilitates precise location information collection and management, aiding in vehicle tracking, evidence gathering, and crime investigation.

Typical Applications

Freeway

Urban Road

Free-flow Tolling

Low Emission Zone

Model			TS5510-GH (5MP*2)	TS5511-GH (5MP*2)
Camera	Name		TrafficX Camera	TrafficX Enforcement Camera
	Image Sensor		Color, 2/3" Global Shutter	
	Min. Illumination		Color: 0.001 Lux@(F1.4, AGC ON)	
	Shutter Time		30 us- 40000 us	
	Day/Night Mode		Day/Night/Auto	
	Supplement Light	IR	IR Strobe Light (9 light beads @ 850nm, 16 light beads @ 740nm)	
		IR Distance	60m	
		IR Wave Length	850nm (Default), 740nm (Optional)	
Road Traffic Management	Max. ANPR Range		Up to 50m	
	Max. Vehicle Speed		250 km/h	
	Coverage		Recommended for 2~3 lanes	
	Capture Rate		Up to 99%	
	Recognition Accuracy		Up to 98%	
	Country Region Supported		More than 74 countries and regions	
	Attributes Identification		Plate Color, Vehicle Type, Vehicle Color, Vehicle Brand, No-plate Vehicle Capture	
	Violation Management		Reverse Driving, Vehicle Attributes Event Detection	Red Light Running, Cross Line at Red Light, Reverse Driving, Vehicle Attributes Event Detection
	White/Black List		Up to 20,000 records inside the camera	
	LPR Smart Search		Support	
Interface	Ethernet		1*RJ45 10M/100M/1000M Ethernet Port	
	RS485		Support	
	Input		4 * Optoisolated Input	
	Output		2 * Strobe Output 1 * Relay Output	
Lens	Lens		15-50mm, Motorized zoom and focus	
	Mount		Custom mount	
	Field of View		horizontal FOV 41.4° to 10.3°, vertical FOV 26.8° to 8.42°, diagonal FOV 32° to 13.3°	

Video	Max. Resolution	2464x2056
	Max. FPS	30fps
	Video Compression	H.265/H.264/MJPEG
	Video Bit Rate	16Kbps~16Mbps (CBR/VBR Adjustable)
	Image Setting	Brightness/Contrast/Saturation
	Privacy Masking	Up to 24 Areas (per Sensor)
Wireless Network (Optional)	Cellular	4G LTE NA: B2/B4/B5/B12/B13/B25/B26 EU: B1/B3/B7/B8/B20/B28 AU: B1/B2/B3/B4/B5/B7/B8/B28/B66
	SIM Card	Nano SIM
System	System Compatibility	API, HTTP, TCP, MQTT, ONVIF Profile G & S & T
	Storage	Support microSD/SDHC/SDXC Card Local Storage, up to 1TB
General	GPS	Built-in High-accuracy GPS Module
	Working Temperature	-40°C ~ 70°C
	Working Humidity	0~95% (Non-condensing)
	Power Consumption	22W MAX 26W MAX (With IR on)
	Weather Proof	Up to IP67-rated for Weather-resistant Performance
	Power Supply	24 V DC/AC
	Weight	4.3Kg
	Dimensions	121mmx295mmx245mm (Without Mounting Bracket)
	Warranty	3 Years

V 1.1

Structure Diagrams

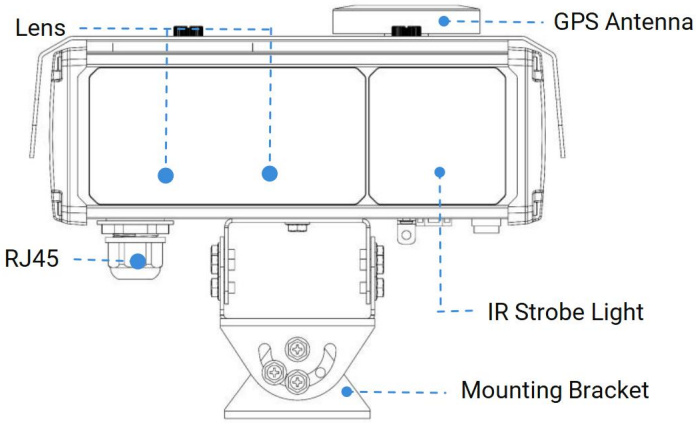

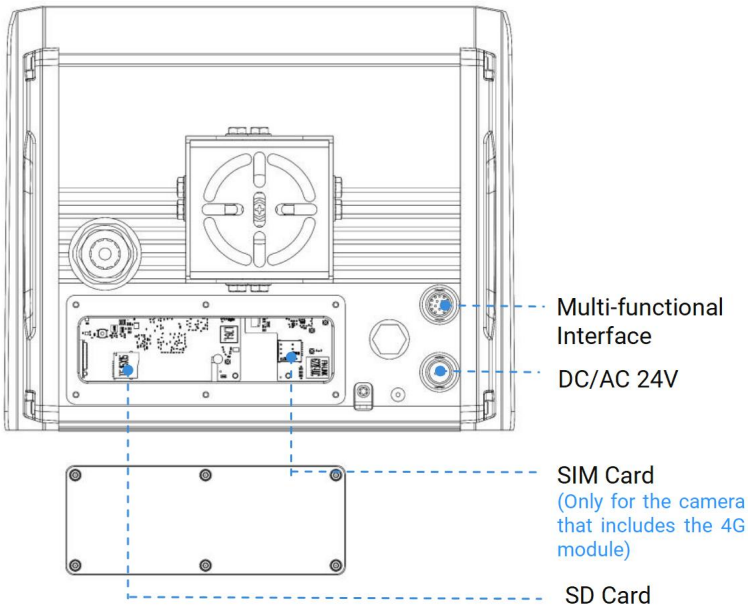

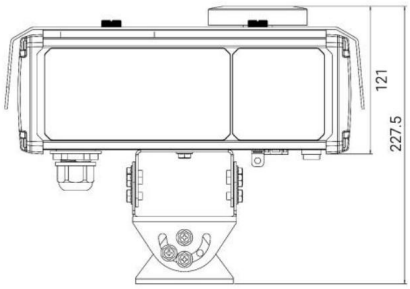

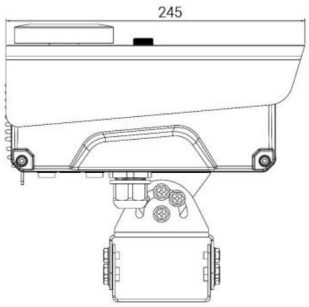

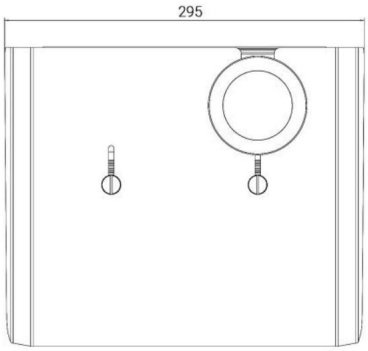

Units: mm

Accessories Support

A91 Pedestal Mount

Weight: 490g

Dimensions: 95*95*110mm

A92 Wall Mount

Weight: 420g

Dimensions:300*80*122mm

A01 Pole Mount

(compatible with A91/A92)

Weight: 720g

Dimensions:

170*51.5*152.6mm

Milesight | www.milesight.com
Contact Us: sales@milesight.com support@milesight.com

Add: Phase III, Xiamen 361024, Fujian, China
Building c09, Software Park
Tel: +86-592-5922772